Model MK 56 | Dynamic climate chambers for rapid temperature changes

The BINDER MK series chamber is suitable for all heat and cold tests between -40 °C and 180 °C. The MK is a clever alternative to complex individual solutions for cyclical temperature tests.

BENEFITS

- Homogeneous climate conditions thanks to APT.line™ technology
- Comprehensive programming and data acquisition
- Large heated viewing window

Model 56

Model 56

MAIN FEATURES

- Temperature range: -40 °C to +180 °C
- APT.line™ preheating chamber technology
- Programmable condensation protection for test material
- Heated viewing window with LED interior lighting
- BINDER Multi Management Software APT-COM™ Basic Edition
- Troubleshooting system with visual and audible alarms
- Intuitive touchscreen controller with time-segment and real-time programming
- Internal data logger, measured values can be read out in open format via USB
-
- Access port with silicone plug, 50 mm, left
- Class 2 independent adjustable temperature safety device (DIN 12880) with visual alarm
- 4 castors, two with brakes
- Computer interface: Ethernet
- Adjustable ramp function
- Integrated chart recorder
- Real-time clock
- 1 stainless steel rack
- Inner chamber made of stainless steel
- CFC-free refrigerant R-452A
- Cooling with compressor cooling unit

ORDERING INFORMATION

Interior volume [L]	Voltage	Option model	Version	Art.-No.
60	230 V 1~ ph 50 Hz	Standard	MK056-230V	9020-0374
	240 V 1~ ph 60 Hz	Standard	MK056-240V	9020-0388

TECHNICAL DATA

Description	MK056-230V[1]	MK056-240V[1]
Article Number	**9020-0374**	**9020-0388**
Performance Data Temperature		
Temperature range	-40…180	-40…180
Temperature variation depending on setpoint [± K]	0.5…1.5	0.5…1.5
Temperature fluctuation depending on setpoint [± K]	0.1…0.5	0.1…0.5
Average heating-up rate according to IEC 60068-3-5 [K/min]	5	5
Cooling down time from 180 °C to -40 °C [min]	90	90
Average cooling down time according to IEC 60068-3-5 [K/min]	5	5
Max. heat compensation at 25 °C [W]	800	800
Electrical data		
Rated Voltage [V]	230	240
Power frequency [Hz]	50	60
Nominal power [kW]	2.8	2.8
Unit fuse [A]	16	16
Phase (Nominal voltage)	1~	1~
Measures		
Interior volume [L]	60	60
Net weight of the unit (empty) [kg]	165	165
Permitted load [kg]	60	60
Load per rack [kg]	15	15
Viewing window width [mm]	288	288
Viewing window height [mm]	255	255
Wall clearance back [mm]	300	300
Wall clearance sidewise [mm]	200	200
Internal Dimensions		
Width [mm]	400	400
Height [mm]	420	420
Depth [mm]	350	350
Doors		
Unit doors	1	1
Housing dimensions not incl. fittings and connections		
Width net [mm]	720	720
Height net [mm]	1445	1445
Depth net [mm]	778	778
Environment-specific data		
Sound-pressure level [dB(A)]	59	59
Fixtures		
Number of shelves (std./max.)	1/4	1/4

1 All technical data is specified for unloaded units with standard equipment at an ambient temperature of +22 °C ±3 °C and a power supply voltage fluctuation of ±10 %. The temperature data is determined in accordance to BINDER factory standard following DIN 12880, observing the recommended wall clearances of 10 % of the height, width, and depth of the inner chamber. Technical data refers to 100 % fan speed. All indications are average values, typical for units produced in series. We reserve the right to change technical specifications at any time.

DIMENSIONS incl. fittings and connections [mm]

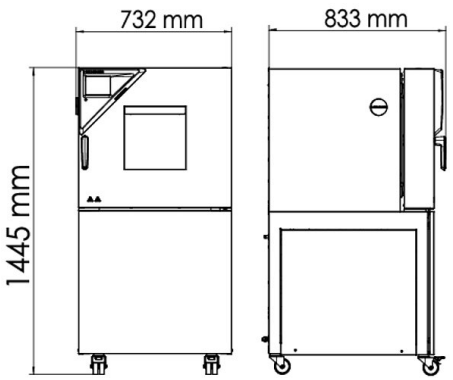

CHARTS

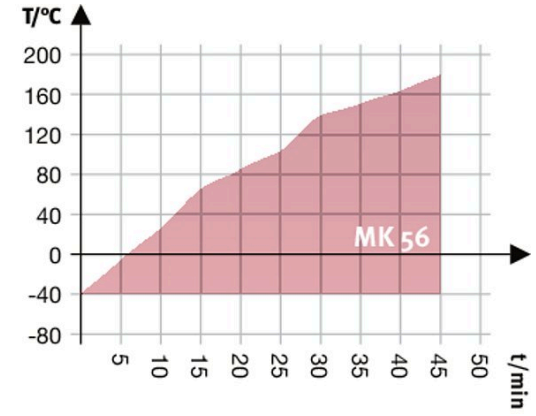

Heating up rate

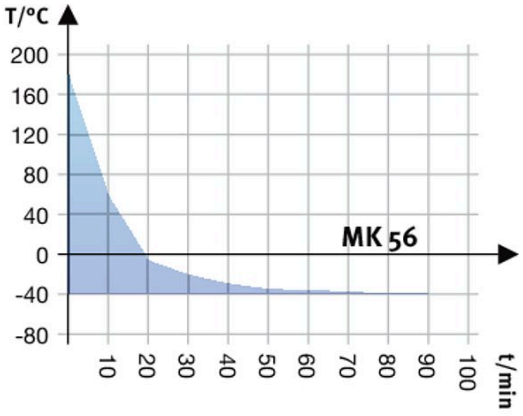

Cooling down rate

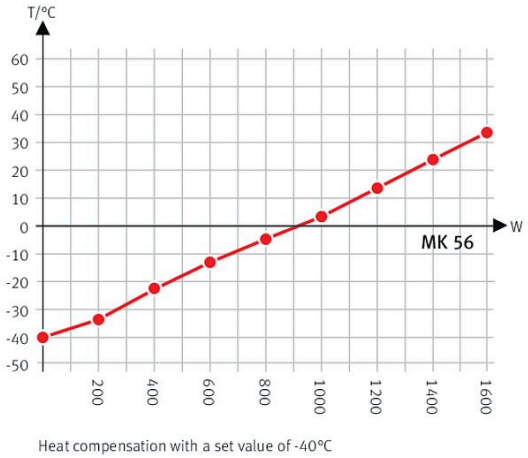

Heat compensation chart

OPTIONS

Designation	Description	*	Art.-No.
Access port with silicone plug	left		
	30 mm	01	8012-1322
	50 mm	01	8012-1328
	80 mm	01	8012-1334
	right		
	30 mm	01	8012-1319
	50 mm	01	8012-1325
	80 mm	01	8012-1331
	top		
	80 mm	01	8012-1536
Analog output 4-20 mA	for temperature values (output not adjustable)	–	8012-1084
Calibration certificate, expanded	for temperature; for extending the measurement in center of chamber to include another test temperature	–	8012-1124
Calibration certificate, temperature	for temperature, measurement in center of chamber at specified temperature	–	8012-1143
	temperature measurement incl. certificate and 27 measuring points at specified temperature	–	8012-1602
	temperature measurement incl. certificate, 15- 18 measuring points at specified temperature	–	8012-1581
	temperature measurement incl. certificate, 9 measuring points at specified temperature	–	8012-1560
Compressed air connection	for the connection to an existing pressurized air network	–	8012-1795
Door lock	lockable door handle	–	8012-1782
Dry-air purge	uncontrolled, incl. connection; for preventing condensation	–	8012-1806
Pt 100 temperature sensor	additional flexible Pt 100, interior, for displaying the temperature on the unit display	–	8012-1093
RS 485 interface, 2-wire	Additional serial interface can be used parallel to Ethernet, for Multi Management Software APT-COM™	–	8012-1768
Temperature safety device class 2	with visual alarm (DIN 12880)	–	8012-1792
Water cooling	for reduced heat loss to ambient air	–	8012-1815
Zero voltage relay contacts	for controlling 3 relay contacts via program regulators, accessible via 6-pin DIN socket (max. 24 V - 2.5 A)	–	8012-1095

* Notes › See last page

ACCESSORIES

Designation	Description	*	Art.-No.
APT-COM™ 4 GLP-Edition	for working under GLP-compliant conditions. Measured values are documented in a tamper-proof way in line with the requirements of FDA Regulation 21 CFR 11.		
	version 4, GLP edition	–	9053-0042
APT-COM™ 4 PROFESSIONAL-Edition	convenient unit and user management built on the BASIC edition. Suitable for networking up to 100 units.		
	version 4, PROFESSIONAL edition	–	9053-0040
Data Logger Kit	T 220: For continuous temperature logging from -90 °C to 220 °C. The kit includes 1 data logger, Pt 100 sensor with 2 m extension cable and 1 magnetic fixture for mounting to the BINDER unit	–	8012-0715
Data Logger Software	LOG ANALYZE software kit, configuration and evaluation software for all BINDER Data Logger Kits (incl. USB data cable)	–	8012-0821
pH-neutral detergent	concentrated, for gentle remove of residual contaminants; 1 kg	–	1002-0016
Qualification documents	IQ/OQ documents – supporting documents for validation performed by customers, consisting of: IQ/OQ checklists incl. calibration guide and comprehensive unit documentation; parameters: temperature, CO_2, O_2, pressure, depending on unit		
	Digital in PDF format	–	7057-0001
	Hard copy inside folder	–	7007-0001
	IQ/OQ/PQ documents – supporting documents for validation performed by customers, according to customer requirements, PQ section added to qualification folder IQ/OQ; parameters: temperature, CO_2, O_2 – or pressure, depending on unit		
	Digital in PDF format	–	7057-0005
	Hard copy inside folder	–	7007-0005

* Notes › See last page

Designation	Description	*	Art.-No.
Rack	stainless steel	–	6004-0150
Rack accessories	fasteners (1 set of 4) for additional security of racks	–	8012-0620
Rack, reinforced	stainless steel, with fasteners (1 set of 4)	–	8012-1091
RS 485 / RS 422 interface converter	RS 422 cable set and RS 485 / RS 422 interface converter for connection to 10-way plug distributor		
	115 V option model	–	8012-0599
	230 V option model	–	8012-0589
Shelf, perforated	Stainless steel	–	6004-0182
WLAN kit	The kit contains a client bridge that establishes a wireless connection between BINDER units and APT-COM4, LIMS, or customer-specific software via an Ethernet interface. It provides an alternative solution in situations where units need to be positioned in locations without an on-site Ethernet connection. In secured networks, installation and configuration must be performed by the customer's IT service.	–	8500-0164

* Notes › See last page

SERVICES

Designation	Description	*	Art.-No.
Installation services			
Unit commissioning	Connect the unit to the customer-side connections (electricity, water, wastewater, gas), basic functions check, brief operating instructions. (excl.: unpacking, setup, controller instructions, programming, installation work)	05	DL10-0300
Unit instructions	Instruction regarding operating principle and basic functions of the unit, operation of the control electronics including programming	05	DL10-0700
Maintenance contracts			
Maintenance services			
BRONZE 3-year maintenance contract	Maintenance service as contractually agreed, visual inspection of mechanical and electrical components, check of control response, 20% discount on spare parts	05	DL20-0710
GOLD 3-year maintenance contract	Maintenance service as contractually agreed, visual inspection of mechanical and electrical components, check of control response, 20% discount on spare parts, testing of all key functions, replacement of wear parts, calibration of one temperature/humidity value, including certificate	05	DL20-0920
Leakage test	Testing and logging of the leak-tightness of systems containing hydrofluorocarbons in accordance with Regulation EC842/2006, incl. test book	05	DL00-0034
Maintenance	One-off maintenance service in accordance with maintenance schedule. Visual inspection of mechanical and electrical components, testing of all key functions. Calibration of a test temperature specified by the user in center of usable space without certificate	05	DL20-0500
SILVER 3-year maintenance contract	Maintenance service as contractually agreed, visual inspection of mechanical and electrical components, check of control response, 20% discount on spare parts, testing of all key functions, calibration of one test temperature specified by the user in the center of the usable space, without certificate	05	DL20-0830
Calibration services			
Calibration certificate, temperature	Calibration of one (1) test temperature specified by the user in center of chamber, including certificate	03, 04, 05	DL30-0101
	Extension of calibration of one (1) additional test temperature specified by the user in the center of the usable space, including certificate	03, 04, 05	DL30-0102
Temperature measurement, 18 measuring points	Temperature measurement with 18 measuring points with a set value specified by the user, including certificate	03, 04, 05	DL30-0118
Temperature measurement, 27 measuring points	Temperature measurement with 27 measuring points with a set value specified by the user, including certificate	03, 04, 05	DL30-0127
Temperature measurement, 9 measuring points	Temperature measurement with 9 measuring points with a set value specified by the user, including certificate	03, 04, 05	DL30-0109
Validation services			
Execution of IQ/OQ	Execution of IQ/OQ in accordance with qualification folder	05	DL41-0200
Execution of IQ/OQ/PQ	Execution of IQ/OQ/PQ in accordance with qualification folder	05	DL44-0500
Warranty service			
1-year warranty extension	The warranty is extended by 1 year from the delivery date, wear parts are excluded	–	DL50-0040

* Notes › See last page

NOTES

01 Condensation may occur in the area around the access port. Access ports may be placed in custom locations for an additional charge.
02 UL mark is not granted when this option is used.
03 Sensor calibration is performed in an accredited calibration laboratory.
04 Calibration is performed according to the BINDER factory standard.
05 Quoted prices do not include travel costs. Please refer to the chapter on BINDER Service for travel costs for your region. Quoted prices for services performed in Switzerland do not include a country-specific added fee (available on request).

BINDER GmbH
Tuttlingen, Germany
TEL +49 7462 2005 0
FAX +49 7462 2005 100
info@binder-world.com
www.binder-world.com

BINDER Asia Pacific (Hong Kong) Ltd.
Kowloon, Hong Kong, P.R. China
TEL +852 39070500
FAX +852 39070507
asia@binder-world.com
www.binder-world.com

Representative Office for CIS
Moscow, Russia
TEL +7 495 988 15 16
FAX +7 495 988 15 17
russia@binder-world.com
www.binder-world.com

BINDER Environmental Testing Equipment (Shanghai) Co., Ltd.
Shanghai, P.R. China
TEL +86 21 685 808 25
FAX +86 21 685 808 29
china@binder-world.com
www.binder-world.com

BINDER Inc.
Bohemia, NY, USA
TEL +1 631 224 4340
FAX +1 631 224 4354
usa@binder-world.com
www.binder-world.us